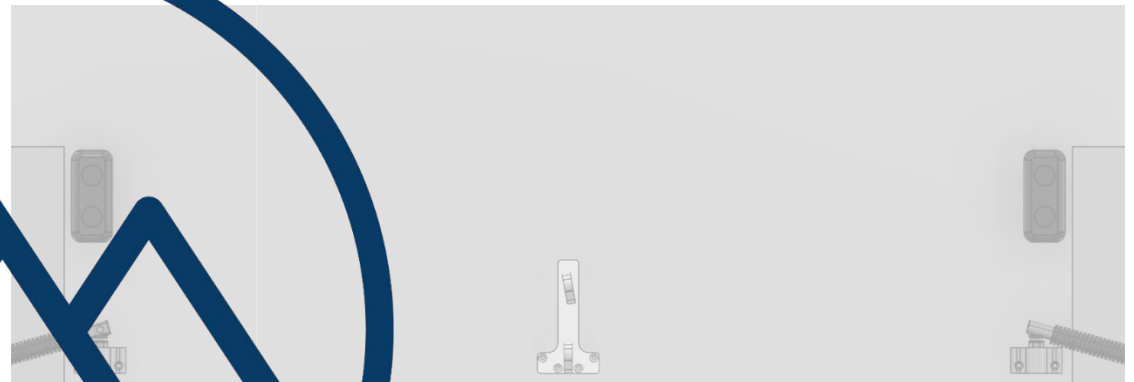

Stablecamper.com

Assembly Manual

Stablecamper.com© US Patent7,497,417

Stablecamper.com

Stablecamper.com© US Patent7,497,417

Parts List	# of Items	
Jack Clamp	2	
Front End Tube Assembly	2	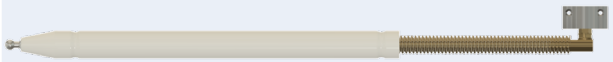
Front Storage Mount	1	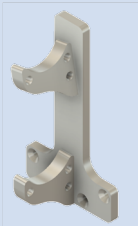
Truck Bed Side Tube Assembly	2	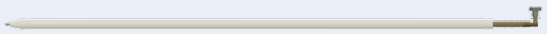
#10 x 1.5" Stainless Steel Flat Head Screw	8	
#10 x 1” Stainless Steel Pan Head Screw	16	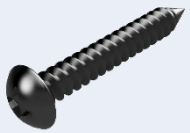

Parts List	# of items	
Side Storage Hanger Mount Front	2	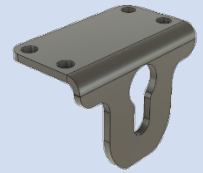
Side Storage Hanger Mount Rear	2	
Extended Front Mount Driver Side	1	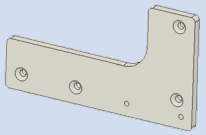
Extended Front Mount Passenger Side	1	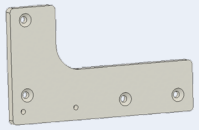
Allen Wrench	1	
Rubber Spacers	4	

General Notes:

- Before you begin the installation, remove the camper from the truck and make sure it is leveled.
- All mounted assemblies will need to be securely attached with supplied hardware to the camper frame.
- Avoid drilling pilot holes too close to the edge of the camper frame.
- Check the front tubes and hanger mounts as well as the side tubes and hanger mounts for any possible clearance issues.
- Confirm that the tubes will not be interfering with the tie down hooks, water, or any connections under the camper overhang.
- Apply RV sealant to all holes.
- Wear proper safety equipment.
- Do not stand, sit or climb on Stablecamper.

Stablecamper.com

Stablecamper.com© US Patent7,497,417

Install rubber gasket as shown on lobe and non lobe sides of jack clamp.

Mount the jack clamps to the fixed portion of the jack above the rubber stoppers.

Centerline of Jacks

Drivers Side

Passenger Side

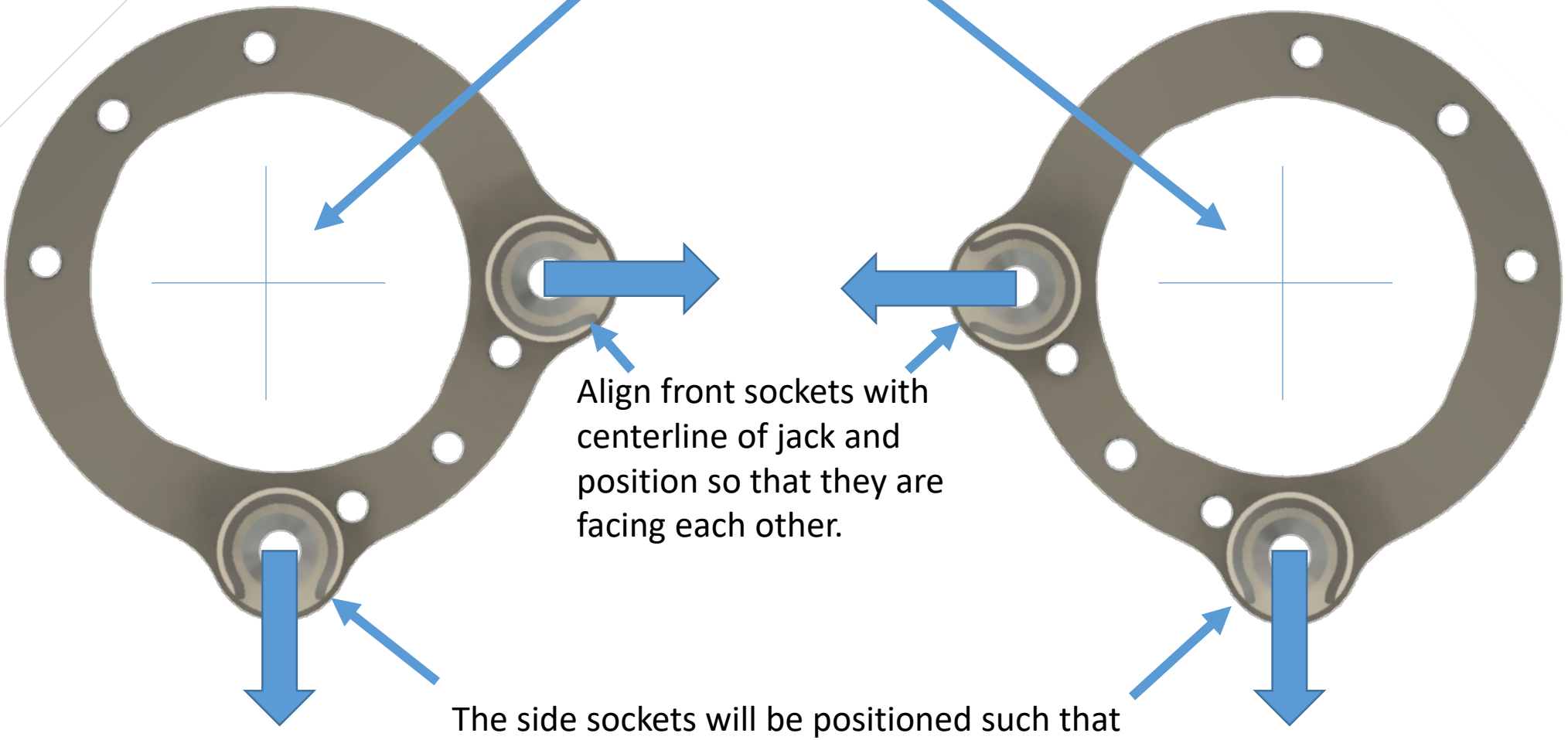

Align front sockets with centerline of jack and position so that they are facing each other.

The side sockets will be positioned such that they are collinear with the centerline of the jack as shown in the illustration.

View: Front Face of Camper

Passenger Side

Driver Side

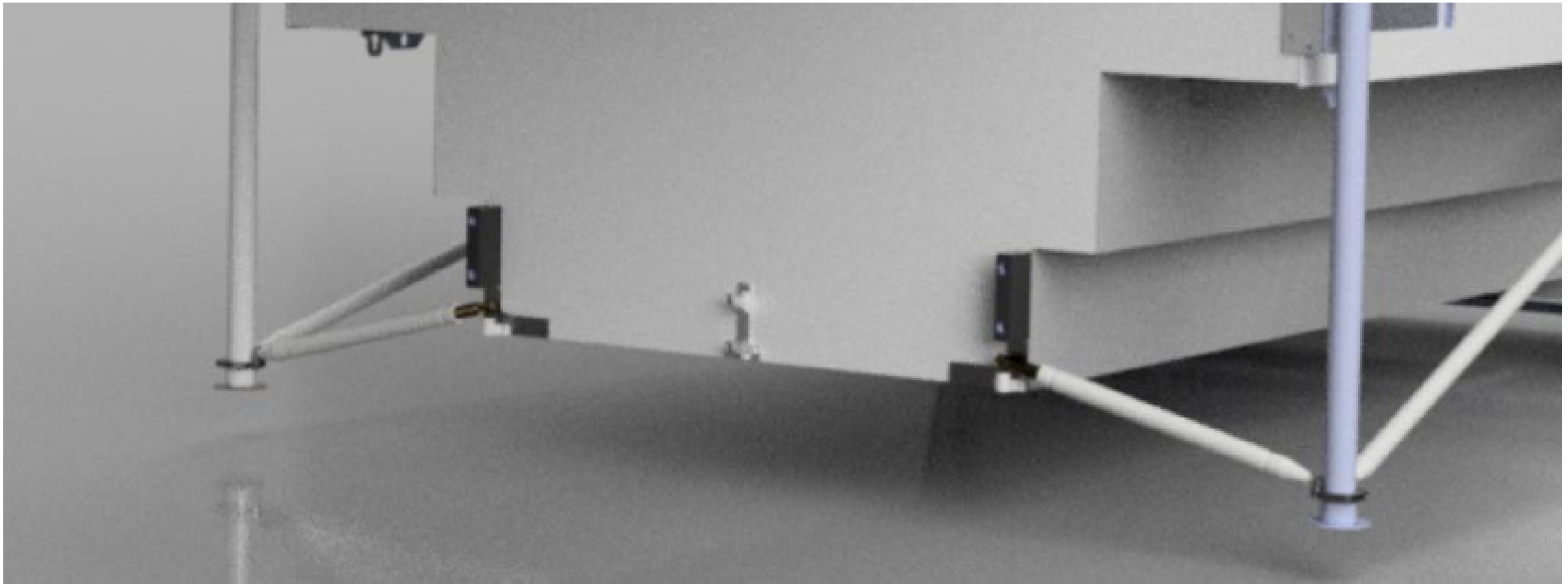

Extended Front Mount Detail

There is a driver side and passenger side orientation to the front mounts. Position the front mounts so that they are mounting to the camper frame. Drill 9/64” pilot holes and attach the mounts with the #10 x 1.5” flat head screws. Do not drill pilot holes too close to the edge of the camper frame. Use RV sealant on any holes and around the mounts.

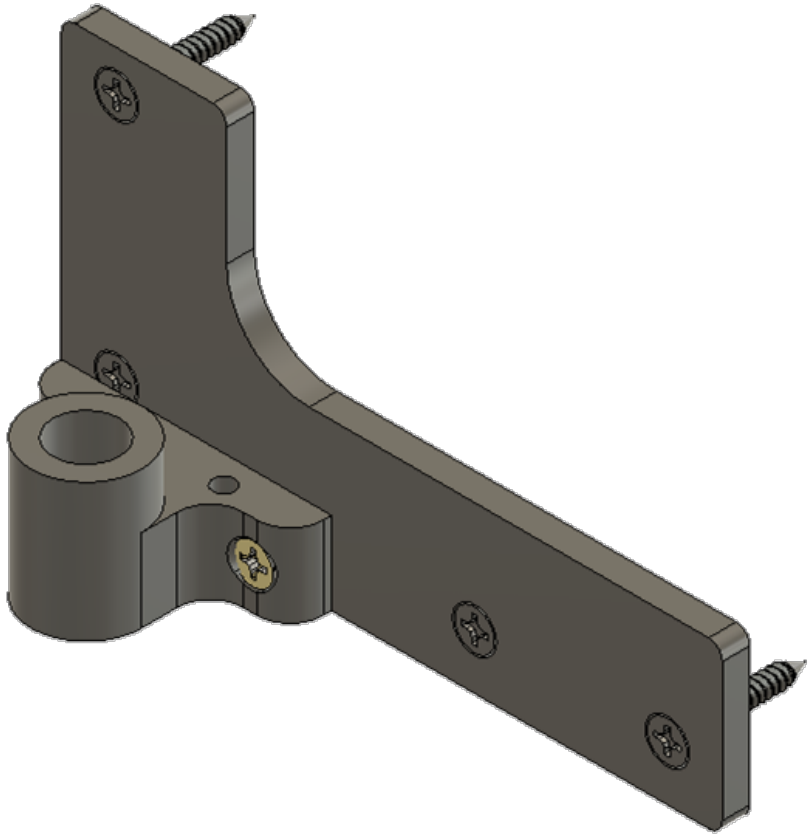

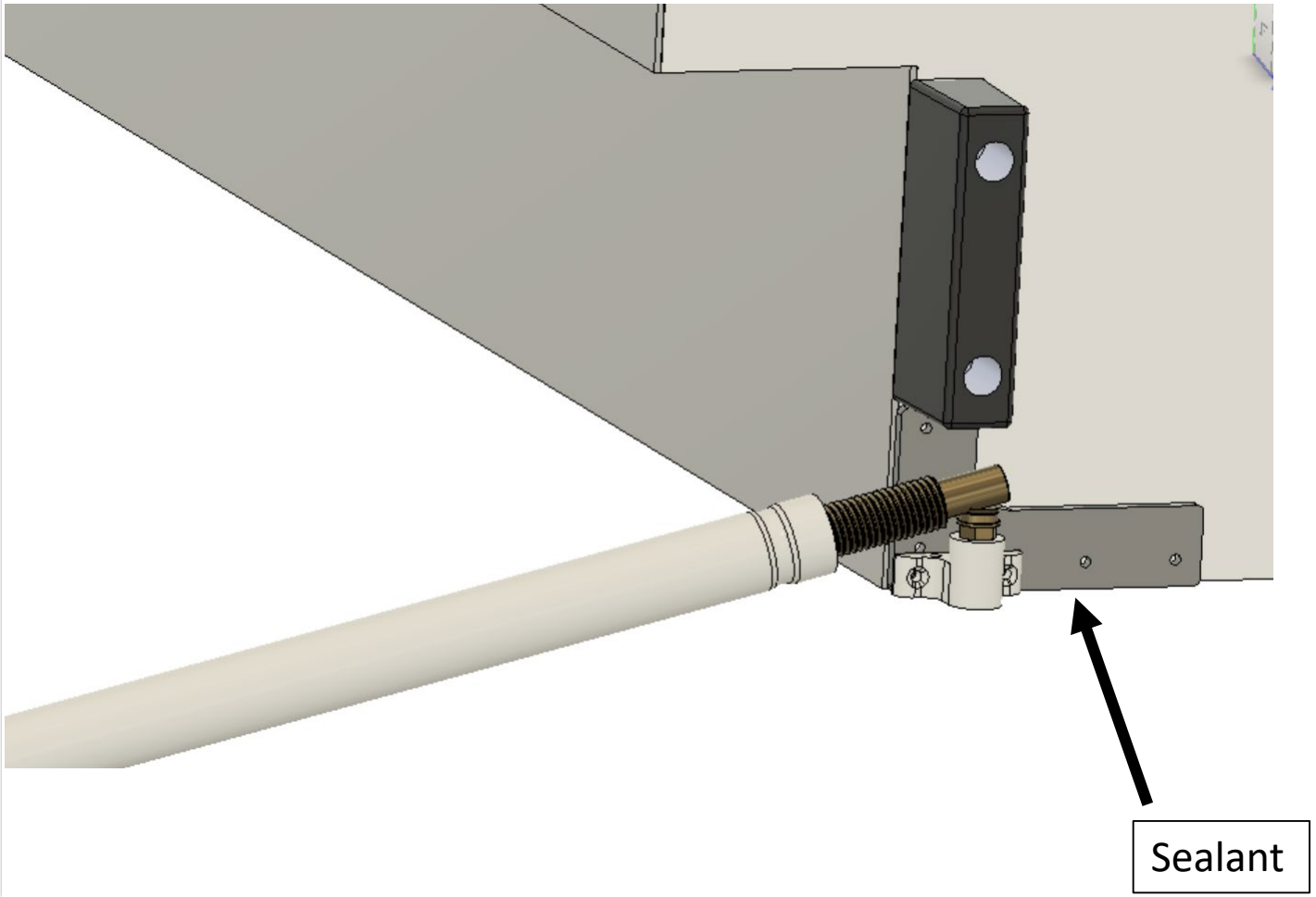

View: Front Face of Camper

Passenger Side

Driver Side

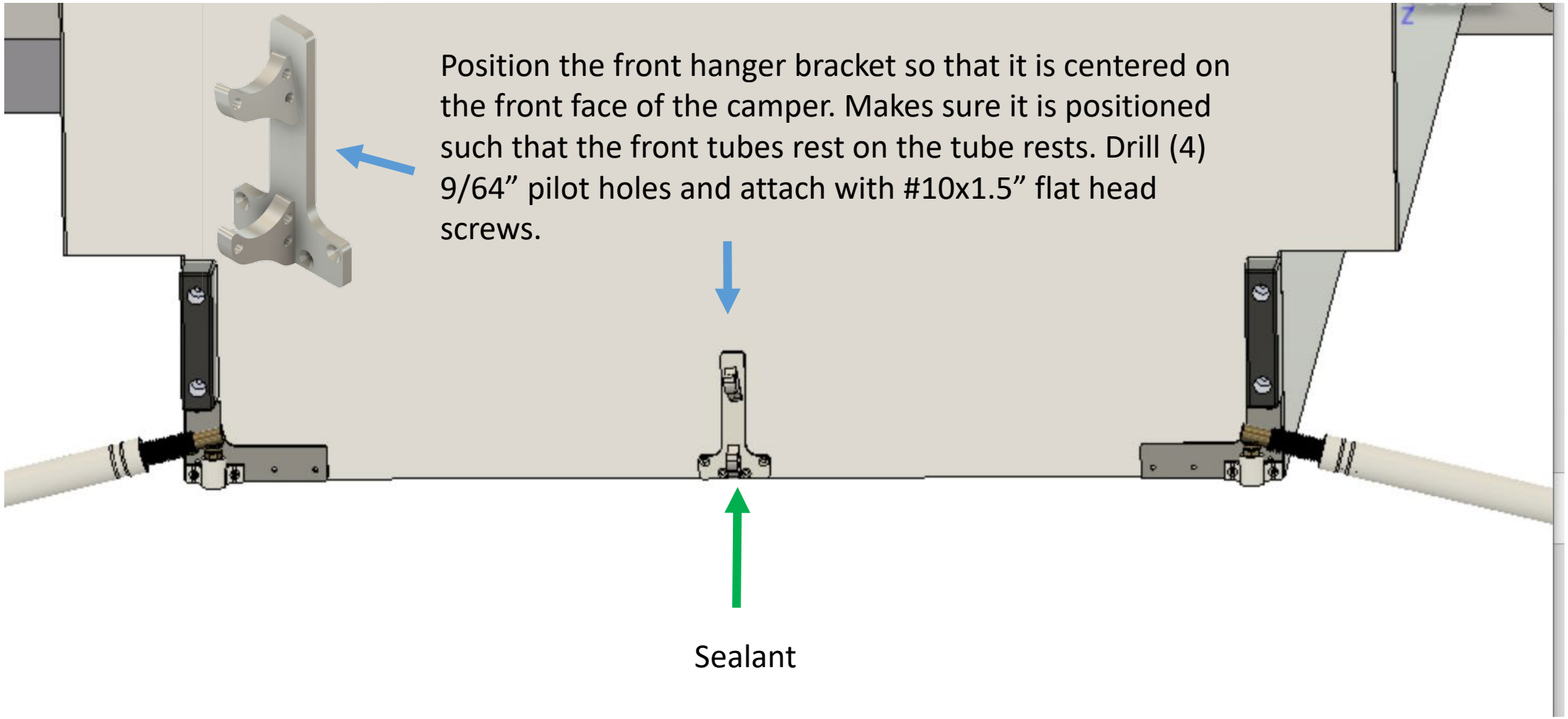

View: Side Face of Camper

- Before installing the storage mounts for the side tubes on the underside of the camper, confirm that the distance between the hanger mounts is the same as the installed length of the Stablecamper before drilling pilot holes.

Installed length of Stablecamper

Zoomed in view of Front Hanging Mount

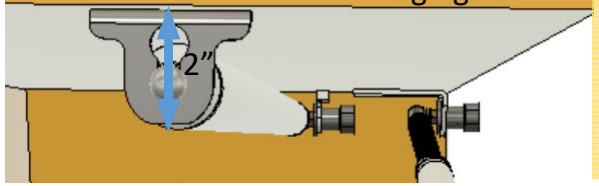

- Once stored on the hanging mounts, the tubes hang 2” below the underside of the camper. The exact placement of the hanging mounts will depend on the truck and your specific clearance needs. The mounts can be placed on the inside or the outside of the truck bedrail depending on your rig and setup.

Side Storage Front Mount Detail

For side tube storage, insert the ball through the keyhole (resting against the neck of the ball). Attach the rear end of the tube to it's rear hanger mount and rotate the tube to tension the tube as desired.

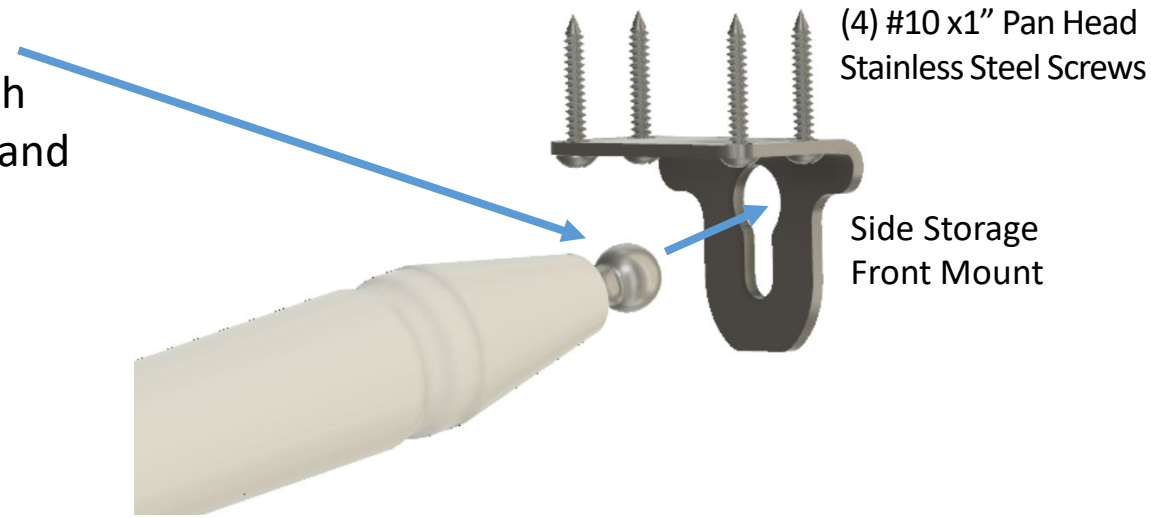

To remove the tube from the mount

1. Release the rear hanger mount and lower the end of the tube.

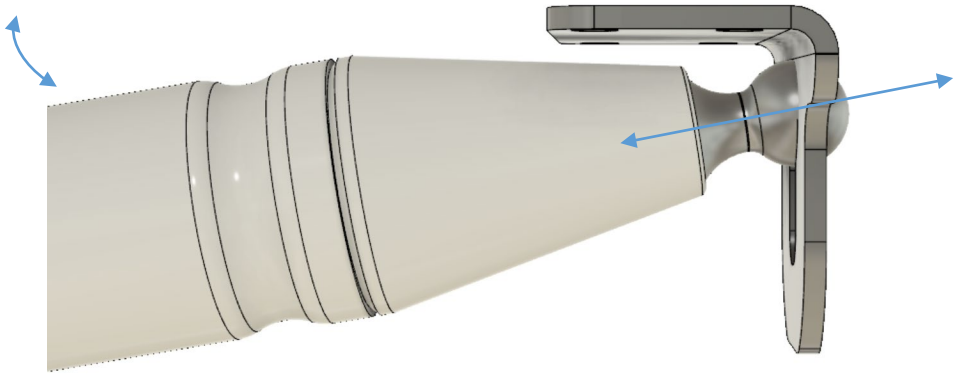

2. The ball now has clearance to be removed or inserted into the mount.

Side Storage Hanger Mount Rear Detail

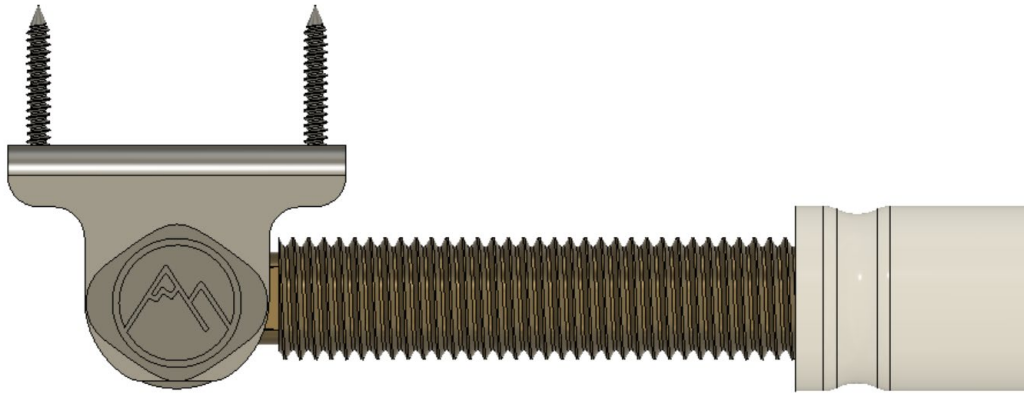

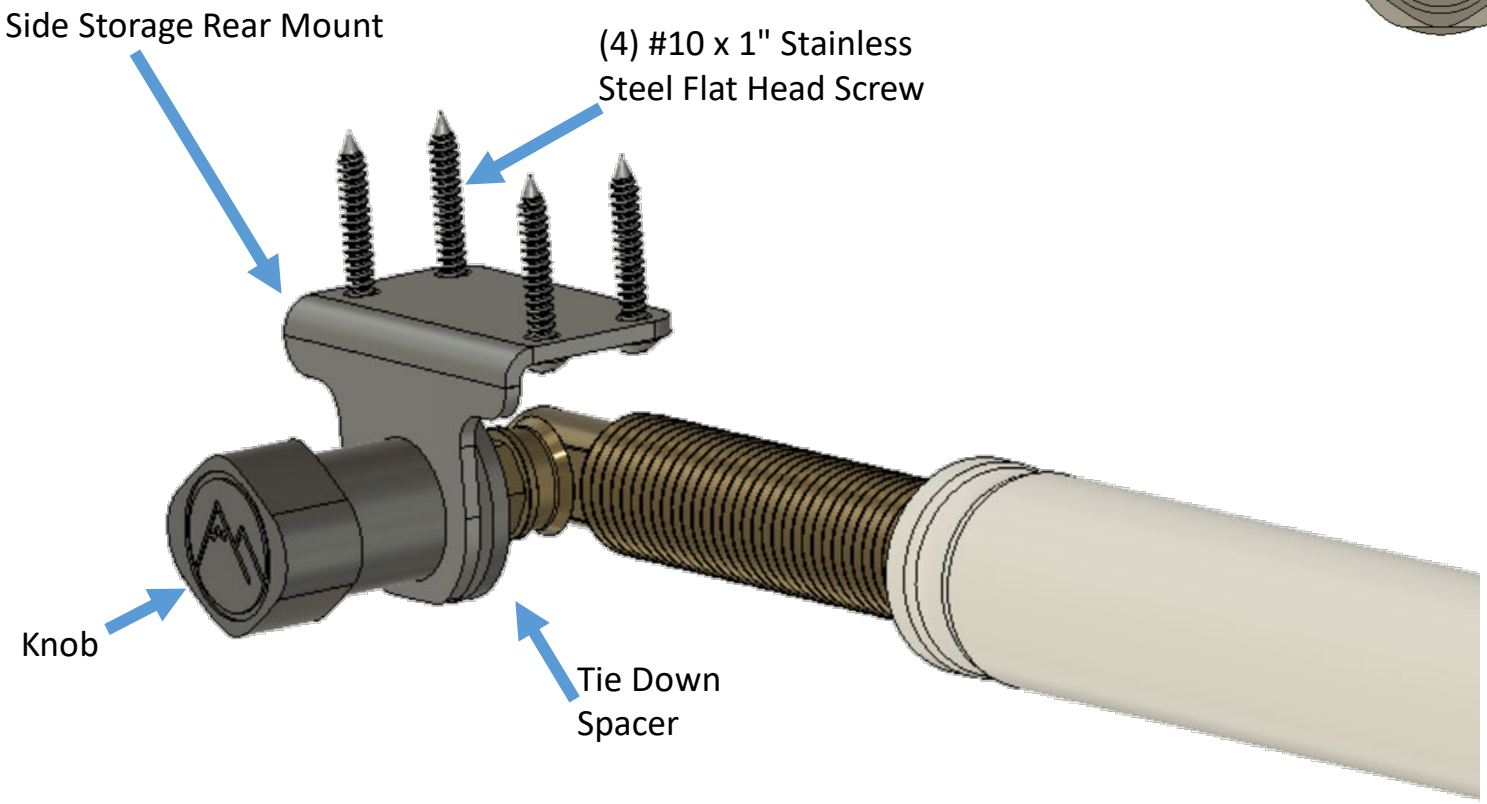

Setup is easy:
Place the ball inside the socket on the jack clamp.
Insert the threaded end through the factory tie down bracket and secure with the knob.
Twist the tube to tighten the assembly. No need to overtighten.

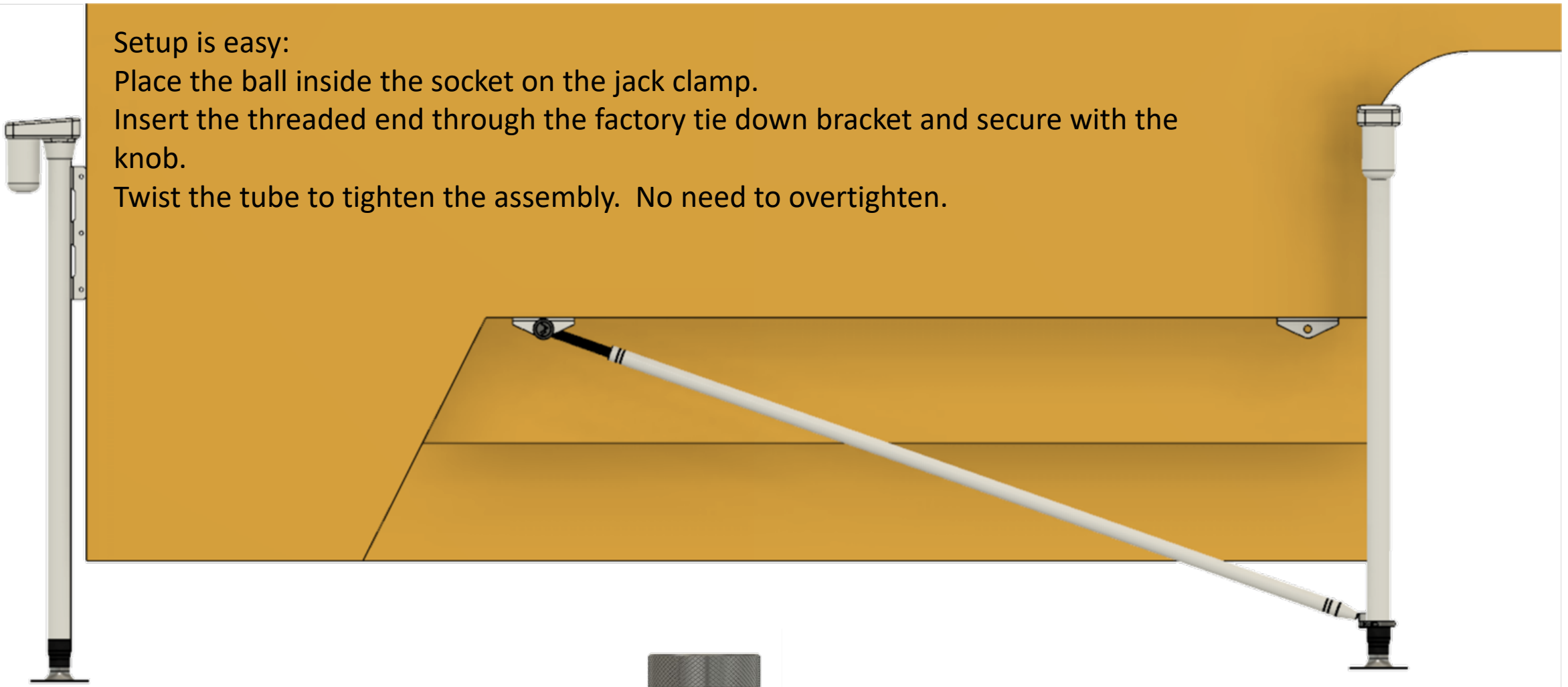

For the front tubes, rotate the tube from the storage position on the front storage hook and place the ball inside the socket on the jack clamp.
Twist the tube to tighten the assembly.
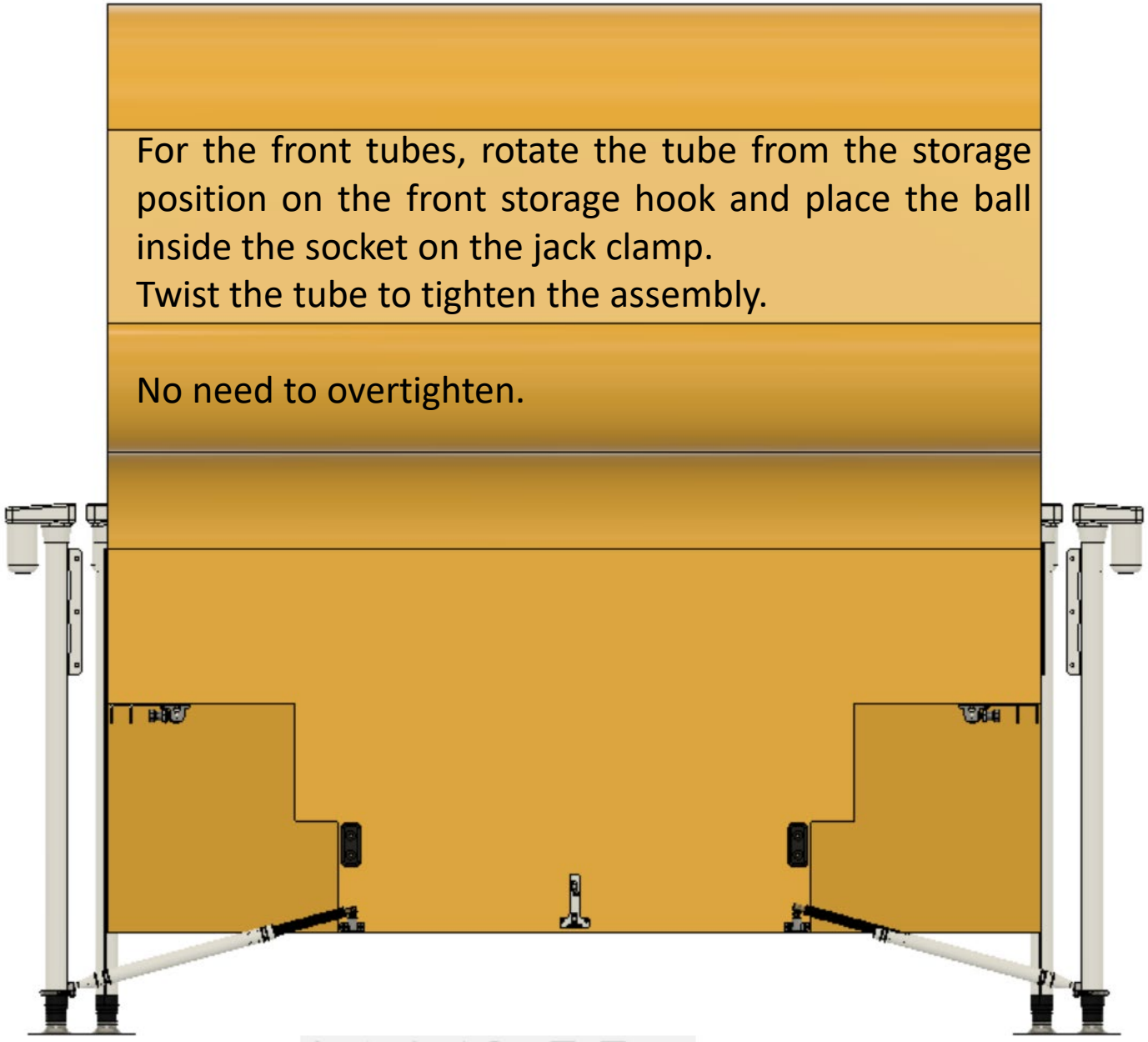
No need to overtighten.